AMW004
Evaluation Guide

AMW004-E02
'Marlin'

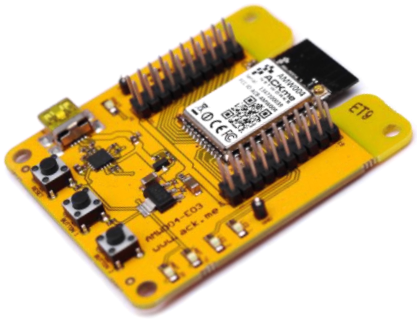

AMW004-E03
'Mackerel'

©2014 ACKme Networks. http://ack.me

Disclaimer

While the information provided in this document is believed to be accurate, it is under development and ACKme Networks reserves the right to make changes without further notice to the product described herein to improve reliability, function, or design, and makes no guarantee or warranty concerning the accuracy of said information, nor shall it be responsible for any loss or damage of whatever nature resulting from the use of, or reliance upon, such information. ACKme Networks makes no warranties of any kind, whether express, implied or arising by custom or course of trade or performance, and specifically disclaims the implied warranties of title, non-infringement, merchantability, or fitness for a particular purpose.

No part of this document may be copied, reproduced, stored in a retrieval system, or transmitted, in any form or by any means, electronic, mechanical, photographic, or otherwise, or used as the basis for manufacture or sale of any items without the prior written consent of ACKme Networks.

Trademarks

ACKme Networks and the ACKme Networks logo are trademarks of ACKme Networks. WICED™ is a trademark of Broadcom® Corporation, Inc. Other trademarks in this document belong to their respective owners.

Copyright © 2014 ACKme Networks, Inc.

All rights reserved.

Document Number: ARG-MW004E-1xx

Release Date: February 27, 2015

Contact

http://ack.me/contact

About this User Guide

This guide provides information and basic usage instructions for the WiConnect serial Wi-Fi application and the AMW004 'Wallaby' module available from ACKme Networks.

Evaluation boards covered by this guide include:

- AMW004-E02 'Marlin with Hornet' (Revision 2)
- AMW004-E03 'Mackerel' (Revision 1)

Further information about WiConnect is available in the WiConnect Reference manual online at:
http://wiconnect.ack.me

Organization

This document is organized into the following sections:

- Introduction, Section 1
- Feature Identification, Section 2
- Using WiConnect, Section 3
- Ordering Information, Section 4
- Revision History & Glossary, Section 5
- Appendix A – Setting up a Terminal Emulator
- Appendix B – Evaluation Board Schematics

Contents

1 Introduction 1
2 Feature Identification 2
2.1 AMW004-E02 'Marlin' 2
2.2 AMW004-E03 'Mackerel' 4
3 Using WiConnect.....5
3.1 Getting Help.....5
3.2 System Indicator LEDs 6
3.3 Scanning for Wi-Fi Networks 6
3.4 Joining a Wi-Fi Network.....6
3.4.1 Web Setup 6
3.4.2 Script Setup.....7
3.4.1 Manual Setup.....8
3.4.2 Wireless Protected Setup (WPS) 9
3.5 Filesystem 9
3.6 UDP / TCP / TLS Clients.....10
3.7 HTTP / HTTPS Clients 11
3.8 Using GPIOs 11
3.9 Factory Reset 12
3.10 Save & Reboot 12
3.11 Command vs. Stream Mode 13
3.11.1 Command Mode 13
3.11.2 Stream Mode 14
3.12 Want more?.....14
4 Ordering Information.....15
5 Revision History & Glossary 16
5.1 Revision History 16
5.2 Glossary 16
APPENDIX A – Configuring a Terminal Application
APPENDIX B – Evaluation Board Schematics

©2014 ACKme Networks. http://ack.me

1 Introduction

The AMW004 'Wallaby' module is a fully certified small form factor, low power WICED-based Wi-Fi networking module perfectly suited to deeply embedded applications requiring medium/high data throughput in medium to high volume.

The module runs WiConnect firmware, ACKme Networks easy-to-use and reliable serial Wi-Fi networking application that includes an embedded TCP/IP networking stack with SSL/TLS/HTTPS security.

Evaluation of WiConnect and the AMW004 module is available with the AMW004-E02 'Marlin' evaluation board, or the AMW004-E03 'Mackerel' evaluation board. The evaluation boards are shown in Figure 1 and a feature comparison of the boards is provided in Table 1.

Figure 1. AMW004 Evaluation Boards

AMW004-E02 'Marlin'
(with AMW004-A01 through-hole module adapter)

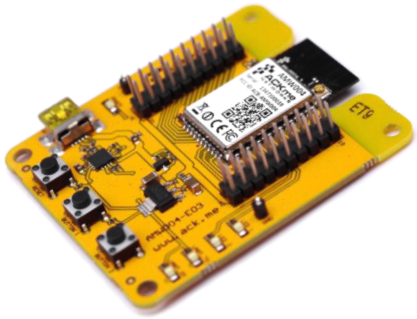

AMW004-E03 'Mackerel'
(with AMW004 surface mount module)

Table 1. AMW004 Evaluation Board Feature Comparison

Feature	AMW004-E02 'Marlin'	AMW004-E03 'Mackerel'
Product Number	AMW004-E02 (AAE001 + AMW004-A01)	AMW004-E03
Module style	Pluggable module adapter	Surface mount
Serial Interface	USB-UART	USB-UART
Power supply	from USB	from USB
User LEDs	2	2
User Buttons	2	2
Reset Button	Y	Y
Expansion Headers	2 x 10	2 x 20

Note! Customers that wish to evaluate the AMW004 module using Broadcom WICED should obtain an alternate evaluation board that provides AMW004 program and debug capability. Information about the AMW004-E01 'Snapper' WICED eval board is available at http://ack.me/products/AMW004_E01_Snapper

©2014 ACKme Networks. http://ack.me

2 Feature Identification

2.1 AMW004-E02 'Marlin'

The Marlin evaluation board assembly is in fact comprised of two separate boards that are plugged together. The through-hole AMW004 module adapter (AMW004-A01) plugs directly into the bare evaluation board (AAE001). Schematics for both boards are provided in Appendix B.

Figure 2. AMW004-E02 Features

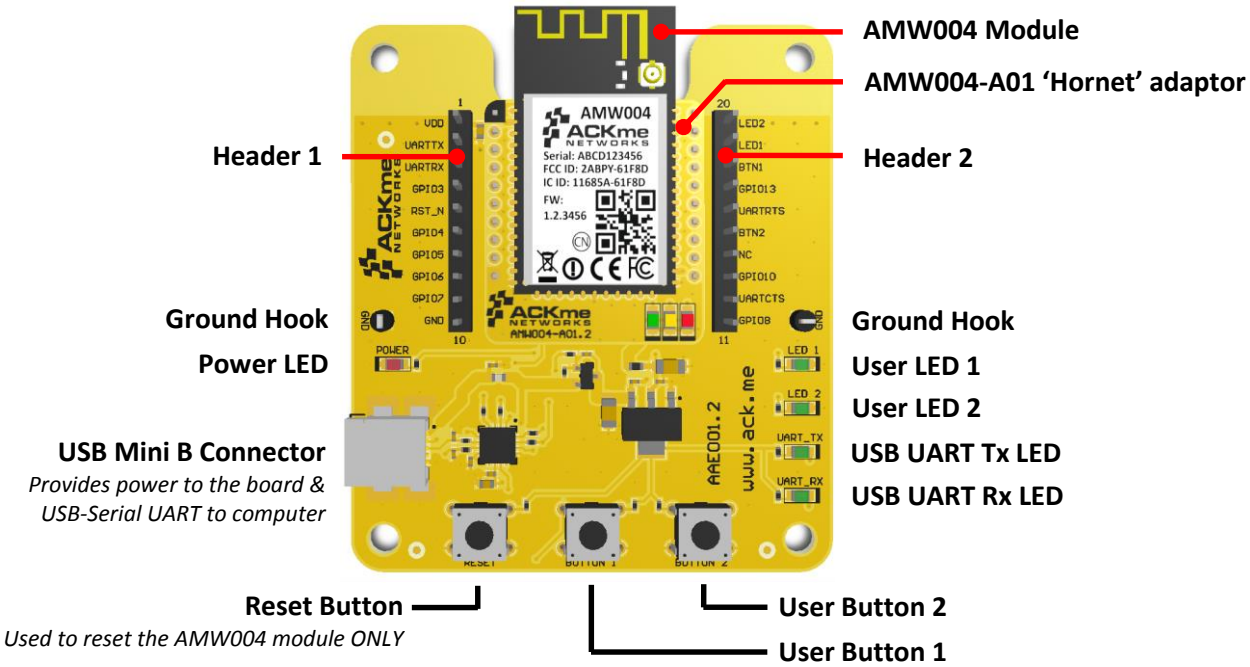

Table 2. AMW004-E02 Expansion Header Connections

AMW004	Marlin V2	Marlin V3	Pin #
VDD_3V3	VDD_3V3	VDD_3V3	1
GPIO_14	USART1_TX	USART1_TX	2
GPIO_13	USART1_RX	USART1_RX	3
GPIO_19[1]	GPIO_3	GPIO_3	4
RESET_N	RESET_N	RESET_N	5
GPIO_26	GPIO_4	BUTTON_2	6
GPIO_25	GPIO_5	LED_2	7
GPIO_22	BUTTON_1[3]	GPIO_6	8
GPIO_21	GPIO_7	THERM	9
GND	GND	GND	10

Pin #	AMW004	Marlin V2	Marlin V3
20	GPIO_28	LED_2	I2C_SDA
19	GPIO_27	LED_1	I2C_SCL
18	GPIO_17[1]	GPIO_14[3]	SPI_SCK
17	GPIO_20[1]	GPIO_13	SPI_CS
16	GPIO_15	USART1_RTS	USART1_RTS
15	GPIO_12	BUTTON_2	LED_1
14	-[2]	-	-
13	GPIO_0	GPIO_10	BUTTON_1
12	GPIO_16	USART1_CTS	USART1_CTS
11	GPIO_18[1]	GPIO_8	SPI_MOSI

Notes

1 *Connection to AMW004 is via a 220R resistor*
2 *Not connected to AMW004 by default. R8 must be populated with a 0R link to make the connection.*
3 *The silkscreen is WRONG! Button 1 is actually connected to Pin 8 of the expansion header.*

©2014 ACKme Networks. http://ack.me

Table 3. AMW004-E02 Expansion Header Connections

AMW004	Hornet	Pin #
VDD_3V3	VDD_3V3	1
GPIO_14	USART1_TX	2
GPIO_13	USART1_RX	3
GPIO_19[1]	SPI_MISO	4
RESET_N	RESET_N	5
GPIO_26	WAKE	6
GPIO_25	GPIO_25	7
GPIO_22	GPIO_22	8
GPIO_21	GPIO_21	9
GND	GND	10

Pin #	AMW004	Hornet
20	GPIO_28	I2C0_SDA
19	GPIO_27	I2C0_SCL
18	GPIO_17[1]	SPI_SCK
17	GPIO_20[1]	SPI_CS
16	GPIO_15	USART_RTS
15	GPIO_12	GPIO_12
14	-	-
13	GPIO_0	GPIO_0
12	GPIO_16	USART1_CTS
11	GPIO_18[1]	SPI_MOSI

Notes

1 Connection to AMW004 is via a 220R resistor

©2014 ACKme Networks. http://ack.me

2.2 AMW004-E03 'Mackerel'

The Mackerel evaluation board comes complete with a surface mount AMW004 'Wallaby' module. Each pin on the Wallaby module is connected to the expansion header. Schematics for the board are provided in Appendix B.

Figure 3. AMW004-E03 Features

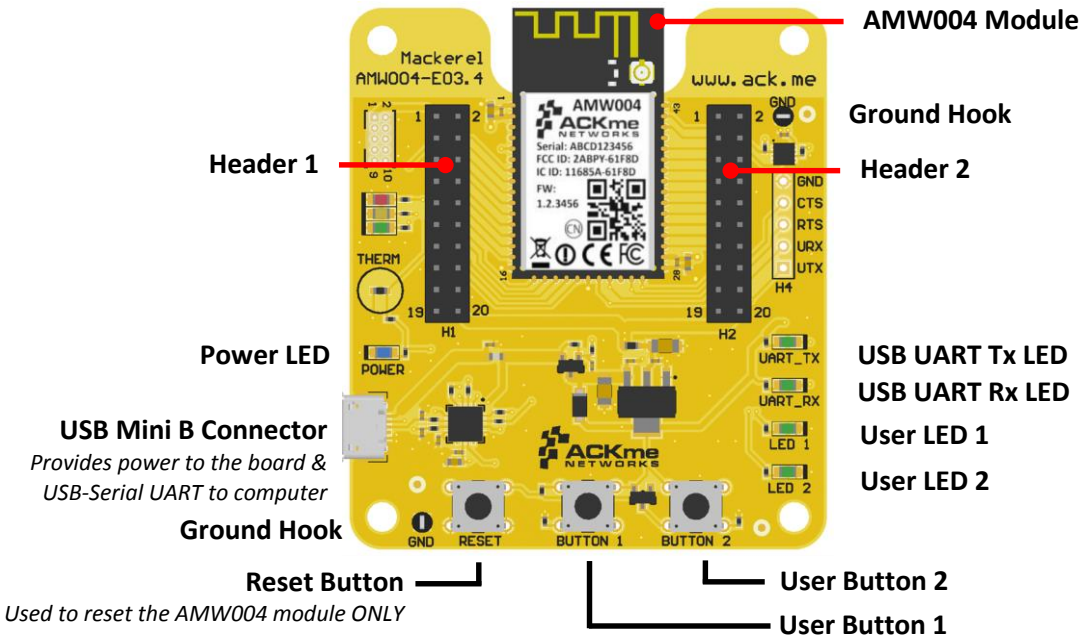

Table 4. AMW004-E03 Expansion Header Connections

AMW004	H1 Pin		AMW004
VDD_3V3	1	2	GND
GPIO_1	3	4	GPIO_0
OSC_32K_OUT	5	6	GPIO_2
GPIO_4	7	8	GPIO_3
GPIO_6	9	10	GPIO_5
GPIO_8	11	12	GPIO_7
GPIO_10	13	14	GPIO_9
GPIO_12	15	16	GPIO_11
RESET_N	17	18	-
GND	19	20	VDD_3V3

AMW004	H2 Pin		AMW004
VDD_3V3	1	2	GND
GPIO_27	3	4	GPIO_28
GPIO_25	5	6	GPIO_26
GPIO_23	7	8	GPIO_24
GPIO_21	9	10	GPIO_22
GPIO_19	11	12	GPIO_20
GPIO_17	13	14	GPIO_18
USART1_CTS	15	16	USART1_RTS
USART1_TX	17	18	USART1_RX
GND	19	20	VDD_3V3

Note: The H2 pin numbering shown here is for all versions after AMW004-E03.1.
In AMW004-E03.1, H2 pins were numbered in a different order, with pins 1 and 2 at the buttons end and pins 19 and 20 at the antenna end: E03.1 H2 pin 1 = E03.2+ H2 pin 19, E03.1 H2 pin 2 = E03.2+ H2 pin 20, and so on.

©2014 ACKme Networks. http://ack.me

3 Using WiConnect

To get started with WiConnect, plug the AMW004 evaluation board into the USB port of the computer and open a terminal emulator as described in Appendix A. The USB cable provides the evaluation board with power and a serial UART connection to the computer.

With the board connected to the computer, verify the power LED is illuminated. If the power LED is NOT illuminated, try re-plugging the USB cable, or try a different USB cable.

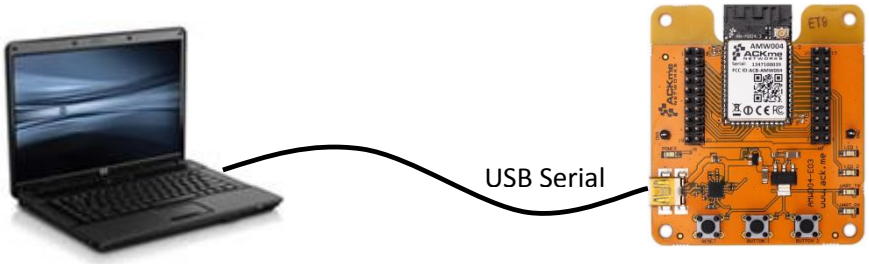

Computer with Terminal Emulator **WiConnect Evaluation Board**

Note! Be sure to use a quality USB cable. Inferior cables may result in reduced or intermittent operation of the evaluation board.

3.1 Getting Help

WiConnect provides extensive help for each command and variable. To obtain a list of help options, type the `help` command.

```
> help
The following help options are available ...
  help all        -> Print a list of all Commands and Variables
  help commands   -> Print a list of Commands
  help variables  -> Print a list of Variables
  help <command>  -> Print help for a specific Command
  help <variable> -> Print help for a specific Variable

  Additional help is available online at http://wiconnect.ack.me
```

To obtain help for a particular command or variable, type `help <command>` or `help <variable>`.
To obtain help for the `wlan_scan` variable, type `help wlan_scan`.

```
> help wlan_scan
Usage   : wlan_scan [-v] [<channel> [ssid]]
Shortcut: scan
Brief   : Initiate a Wi-Fi scan and return results; optionally specify
a channel and AP SSID to scan for. For verbose scans, -v must be the first argument
```


©2014 ACKme Networks. http://ack.me

3.2 System Indicator LEDs

The Mackerel evaluation board comes with three system indicator LEDs and two user LEDs. The LED functions are configurable, using the WiConnect peripheral commands and variables. See http://wiconnect.ack.me for more details., in particular the variables `system.indicator.gpio` and `system.indicator.state`.
By default the system indicator LEDs are configured as follows:

LED	Function	Behavior	
Red	Soft AP Indicator	Off	Soft AP off
		Fast blink	Soft AP error
		Medium blink	Soft AP active
		Slow blink	Client connected
Yellow	Network Indicator	Fast blink	No IP address
		Medium blink	DHCP in progress
		Slow blink	DHCP successful, IP address obtained
Green	WLAN indicator	Off	Wi-Fi off
		Fast blink	Error
		Medium blink	Connecting to AP
		Slow blink	Joined to AP

Blink rates are as follows: Fast blink: 4Hz, Medium blink: 1Hz, Slow blink: 0.5 Hz

3.3 Scanning for Wi-Fi Networks

To scan for Wi-Fi networks in range, use the `wlan_scan` command. Each AP in range is listed on a separate line.

```
> wlan_scan -v
!3 found
! # Ch RSSI BSSID              Rate Security   Mode Len SSID
#00 06  -27 84:1B:5E:29:9D:F7 450.0 WPA2-Mixed  Inf  17 YOUR_NETWORK_NAME
#01 11  -73 2C:B0:5D:31:6F:6A 300.0 WPA2-AES    Inf   6 button
#02 11  -73 EC:1A:59:36:5B:6C 144.4 WPA2-Mixed  Inf   5 REGIS
```

3.4 Joining a Wi-Fi Network

Several methods are available to configure and join the AMW004 module to a Wi-Fi network.

3.4.1 Web Setup

WiConnect provides the option to use a web browser running on a network client (such as a smartphone, tablet or computer) to select the remote Wi-Fi network the AMW004 module should join, and to enter a password for the remote network.

When web setup is used, it is helpful to think of the network client as the keyboard and display for the module as shown in Figure 4.

To start web setup mode, enter the command `setup web`. WiConnect starts the local network and web server as indicated by the final message: `In progress`.

```
> setup web
[Disassociated]
IPv4 address: 10.10.10.1
```


©2014 ACKme Networks. http://ack.me

```
Web setup started with the SSID: "WiConnect Web Setup"
In progress
```

Open the Wi-Fi settings on your smartphone, tablet or computer and join the network called `Wiconnect Web Setup`. The password for the network is simply: `password`. The local network name and password, and the web address may be customised to suit your needs, see the online WiConnect Reference Manual for further information.

After joining the local network, open a web browser on the network client and go to setup.com. The WiConnect web page appears (see Figure 4), and a scan begins for Wi-Fi access points in range. Select the remote network you wish to join, enter the network password then select **Save & Exit** and follow the prompts.

Once the settings are successfully saved, WiConnect prints `Web Setup Mode exited` to the terminal. Check that the settings were successfully saved using `get wlan.ssid` and `get wlan.passkey`.

```
Web Setup Mode exited
> get wlan.ssid
YOUR_NETWORK_NAME
> get wlan.passkey
YOUR_NETWORK_PASSWORD
```

Figure 4. Web setup using a network client

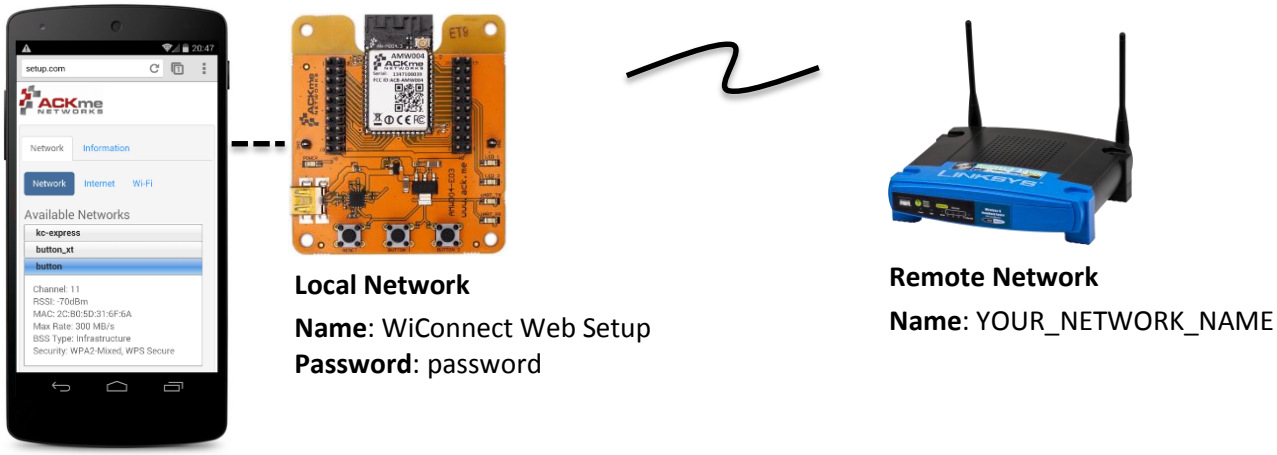

3.4.2 Script Setup

If you prefer instead to enter configuration details for the Wi-Fi network, WiConnect provides a default setup script to step you through the process. The setup script is provided as a file called `default_setup.script` on the WiConnect file system. The setup script may be customised as required.

```
> setup cmd
> Enter Wi-Fi network name:
set wlan.ssid YOUR_NETWORK_NAME
Set OK
> Enter Wi-Fi network password:
set wlan.passkey YOUR_NETWORK_PASSWORD
Set OK
>
```


©2014 ACKme Networks. http://ack.me

```
set wlan.auto_join.enabled true
Set OK
> Saving settings
save
Saved
Success
>
network_up
[2014-05-17 | 11:48:31: Associating to YOUR_NETWORK_NAME]
In progress
> Security type from probe: WPA2-Mixed
Obtaining IPv4 address via DHCP
IPv4 address: 192.168.0.31
[2014-05-17 | 11:48:41: Associated]
> Exiting Cmd Setup Mode
```

3.4.1 Manual Setup

The `network_up` command has a –s option (scan) to simplify setup. It outputs a numbered list of available networks and prompts for a selection, the prompts for the passkey.

```
> network_up -s
Scanning for networks...
! 3 networks found
!  # Ch RSSI MAC (BSSID)       Network (SSID)
#  0  6  -27 84:1B:5E:29:9D:F7 Take the blue pill
#  1 11  -68 EC:1A:59:36:5B:6C button_xt
#  2 11  -70 2C:B0:5D:31:6F:6A button

Type the number # that matches your Network: 0
Type the password for your Network         : welcome-to-kansas
[Associating to Take the blue pill]
In progress
[Associated]
```

This procedure automatically sets the `wlan.ssid` and `wlan.passkey` values. Save after running `network_up -s` to preserve the values through reset.

Alternatively, it is straight forward to manually enter the name and password for the network using the `wlan.ssid` and `wlan.passkey` variables. Be sure to save afterwards, or the values will be lost when the module reboots. Any subsequent command requiring network access, such as an ICMP (Internet Control Message Protocol) ping, automatically results in the module attempting to join the network.

©2014 ACKme Networks. http://ack.me

```
> set wlan.ssid YOUR_NETWORK_NAME
Set OK
> set wlan.passkey YOUR_NETWORK_PASSWORD
Set OK
> save
Saved
Success
> ping -g
[Associating to YOUR_NETWORK_NAME]
Security type from probe: WPA2-Mixed
Obtaining IPv4 address via DHCP
IPv4 address: 192.168.0.31
[Associated]
Ping reply in 25ms
```

3.4.2 Wireless Protected Setup (WPS)

WPS is a Wi-Fi provisioning method originally intended to simplify the process of connecting Wi-Fi clients to Wi-Fi Access Points. WPS offers both a push-button and PIN entry method for configuration. In reality, WPS push-button (as opposed to PIN) is the only method that has gained some level of adoption in the industry, however WPS naturally only works when the Wi-Fi AP supports WPS.

Many AP vendors choose not to test and certify APs with the Wi-Fi Alliance, and the lack of a standard WPS logo next to the WPS button on an AP often means many users are unaware that WPS is available. The potential for equipment incompatibility and added user confusion mean it is unwise to rely on WPS as the primary method of Wi-Fi provisioning in the real world.

Incompatibility and confusion aside, WiConnect provides full support for WPS1.0 & WPS2.0 and the underlying WPS engine has passed Wi-Fi certification. To use WPS in push-button mode, simply enter the `wps` command into WiConnect, then press the WPS button on your router (if the router supports WPS, and it is enabled, and you can find the button), and wait for the magic to happen.

3.5 Filesystem

ACKme Wi-Fi modules running WiConnect include a serial flash memory and a filesystem that provides users with the ability to read and write files. A quick example showing how to create, manipulate then delete a file is provided below.

```
> file_create hello.txt 13
my hello data
File created
Success
> ls
!  #   Size   Version  Filename
#  0   1853     1.2.0  /favicon.ico.gz
#  1  18067     1.2.0  /setup/images.png
#  2  10525     1.2.0  /setup/index.css.gz
#  3  10134     1.2.0  /setup/index.html
#  4  39114     1.2.0  /setup/index.js.gz
#  5  32251     1.2.0  command_help.csv
#  6    130     1.2.0  default_setup.script
#  7   1236     1.2.0  geotrust_ca.pem
#  8     13     1.0.0  hello.txt
#  9 352516     1.2.0  upgrade_app.exe
# 10 109600     1.2.0  wiconnect.exe
# 11 191677     1.2.0  wifi_fw.bin
```


©2014 ACKme Networks. http://ack.me

```
> file_open hello.txt
[Opened: 0]
0
> stream_read 0 5
my he
> stream_read 0 50
llo data
[Closed: 0]
> file_delete hello.txt
File deleted
Success
>
```

Note! When reading the contents of a file using `stream_read`, the file is automatically closed if the end of file is reached.

3.6 UDP / TCP / TLS Clients

To open a UDP, TCP or secure TLS connection to a remote server, use the `udp_client`, `tcp_client` or `tls_client` commands. WiConnect responds with a stream handle if the connection is opened successfully. For TLS connections, WiConnect provides a default TLS root certificate signed by GeoTrust (located on the WiConnect file system), however this certificate may not work with some TLS servers. A custom certificate may be provided as an option to the `tls_client` command if required.

```
> udp_client test.ack.me 50019
[Opening: test.ack.me:50019]
Resolving host: test.ack.me
Connecting: 107.170.222.80:50019
[2014-05-19 | 11:12:22: Opened: 0]
0
> tcp_client test.ack.me 50019
Resolving host: test.ack.me
[2014-05-19 | 11:12:38: Opening: test.ack.me:50019]
Connecting (TCP): 107.170.222.80:50019
[2014-05-19 | 11:12:39: Opened: 1]
1
> tls_client google.com 443
Resolving host: google.com
[2014-05-19 | 11:12:49: Opening: google.com:443]
Connecting (TLS): 74.125.237.174:443
[2014-05-19 | 11:12:50: Opened: 2]
2
```

Now try writing a character to the UDP or TCP stream that was opened in the examples above (remember, WiConnect does NOT echo characters typed after the `stream_write` command). The server at http://test.ack.me responds with a character pattern using the Chargen (Character Generator) protocol.

```
> stream_write 0 1
Success
> stream_read 0 50
!"#$%&'()*+,-./0123456789:;<=>?@ABCDEFGHIJKLMNOPQR
```

Note! WiConnect supports TCP server mode too!
For more information, please refer to the WiConnect Reference Guide.

©2014 ACKme Networks. http://ack.me

3.7 HTTP / HTTPS Clients

To open an HTTP or secure HTTPS connection to a remote server, read the first 300 bytes of the response then close the connection, use the `http_get`, `stream_read` and `stream_close` commands. WiConnect responds with a stream handle if the connection is opened successfully.

```
> http_get https://www.google.com
[2014-05-19 | 11:14:31: Opening: https://www.google.com]
Request GET /
Connecting (HTTP): www.google.com:443
Starting TLS
[2014-05-19 | 11:14:31: Opened: 0]
HTTP response: 302
Redirected to https://www.google.com.au/?gfe_rd=cr&ei=l-d5U9m2J6GN8QfexoHYCg
Request GET /?gfe_rd=cr&ei=l-d5U9m2J6GN8QfexoHYCg
Connecting (HTTP): www.google.com.au:443
Starting TLS
HTTP response: 200
Status: 200
0
> stream_read 0 300
<!doctype html><html itemscope="" itemtype="http://schema.org/WebPage" lang="en-
AU"><head><meta content="/images/google_favicon_128.png"
itemprop="image"><title>Google</title><script>(function(){
window.google={kEI:"mOd5U4eZAYTVkAXF2oDwBA",getEI:function(a){for(var
b;a&&(!a.getAttribute||!(b=a.getAt
> stream_close 0
[2014-05-19 | 11:14:47: Closed: 0]
Success
>
```

3.8 Using GPIOs

In WiConnect, a GPIO may have two functions: a standard IO function or an alternate function (such as a system indicator, status GPIO or control GPIO). When a GPIO is configured with an alternate function, the standard IO function is NOT available and the `gpio_dir`, `gpio_set`, and `gpio_get` commands are disabled for that GPIO.

Before a GPIO can be used, it is necessary to first check whether the GPIO is being used for an alternate function, or is already in use as a standard GPIO (for another purpose). If the GPIO is in use, it must first be freed up by setting the direction of the GPIO to none using the `gpio_dir` command (standard IO) or by disabling the alternate function.

The example below demonstrates how to control GPIO 26 on the AMW004 module. GPIO 26 is unassigned GPIO after factory reset.

©2014 ACKme Networks. http://ack.me

On AMW004-E02 (Marlin): Header Pin 6 = AMW004 GPIO 26
On AMW004-E03 (Mackerel): Header 2 Pin 6 = AMW004 GPIO 26

```
> gpio_dir 26 out
Set OK
> get gpio.usage
! #   Description
#13 - UART1 RX
#14 - UART1 TX
#17 - SPI CLK
#18 - SPI MOSI
#19 - SPI MISO
#21 - system.indicator.network
#22 - system.indicator.wlan
#26 - Standard I/O
> gpio_set 26 0
Set OK
> gpio_set 26 1
Set OK
> gpio_set 26 0
Set OK
```

3.9 Factory Reset

The AMW004 module may be factory reset using the `factory_reset` command or by holding the factory reset pin (GPIO 0 on all ACKme modules) high for more than 10 seconds through a hardware reset. After a successful factory reset, all variables are set to factory defaults and the module reboots. To avoid accidental factory reset, the Wi-Fi MAC address must be provided when calling the `factory_reset` command.

```
> get wlan.mac
4C:55:DC:15:02:5D
> factory_reset 4C:55:DC:15:02:5D
Reverting to factory default settings
Setting boot app to wiconnect.exe (0)
wiconnect-1.1.0.5, Built:2014-05-07 00:07:31 for AMW004.3, Board:AMW004-E03.1
[Ready]
>
```

3.10 Save & Reboot

When the value of a WiConnect variable is changed, the new value is only saved to RAM (not flash!). The value of unsaved variables is lost when the module is reset or rebooted. To save variables to non-volatile flash memory, use the `save` command. The following example demonstrates that failing to save the `wlan.ssid` prior to reboot results in the newly assigned value being lost.

```
> set wlan.ssid ssid_WONT_be_saved
Set OK
> reboot
[Disassociated]
Rebooting
wiconnect-1.1.0.5, Built:2014-05-07 00:07:31 for AMW004.3, Board:AMW004-E03.1
[Ready]
> get wlan.ssid
> set wlan.ssid ssid_WILL_be_saved
Set OK
> save
Saved
```


©2014 ACKme Networks. http://ack.me

```
Success
> reboot
[Disassociated]
Rebooting
wiconnect-1.1.0.5, Built:2014-05-07 00:07:31 for AMW004.3, Board:AMW004-E03.1
[Ready]
> get wlan.ssid
ssid_WILL_be_saved
>
```

Note! WiConnect configures some services (such as GPIO initialization) only after reboot. It may be necessary to save and reboot the module before the new value of some variables takes effect.

3.11 Command vs. Stream Mode

The WiConnect serial interface may be used in either Command Mode or Stream Mode. A brief description of each of these modes is provided in the following text. For detailed information, please refer to the WiConnect Reference Guide.

3.11.1 Command Mode

Command mode provides an asynchronous command interface that a host may use to send and receive control and data information. Command mode is typically used by a host to configure WiConnect, however it may also be used by simple hosts that need ultimate master/slave control over information sent to, and received from, the module. All preceding examples demonstrate usage of WiConnect in command mode.

There are two ways to interact with WiConnect in Command mode. When operating in human friendly command mode, WiConnect provides verbose asynchronous responses that are easy for humans to read. In machine friendly command mode, verbose prints and the command prompt are disabled and a well-defined response header is returned after each command.

Configuring Command Mode

Command mode can be configured using the convenience variable `system.cmd.mode`

Command	Description
`set system.cmd.mode human`	Enable human friendly command mode
`set system.cmd.mode machine`	Enable machine friendly command mode

Setting `system.cmd.mode` executes a macro that sets the value of the four variables used to switch between human and command mode. These variables, together with the human and machine mode setting, are listed in the following table.

Command	Human	/	Machine	Description
`set system.print_level`	`all`	/	`0`	Set debug & informational print level
`set system.cmd.header_enabled`	`0`	/	`1`	Disable/enable a response header
`set system.cmd.prompt_enabled`	`1`	/	`0`	Turn on/off the user prompt
`set system.cmd.echo`	`on`	/	`off`	Turn on/off character echo. In human mode, lets you see what you're typing

©2014 ACKme Networks. http://ack.me

3.11.2 Stream Mode

Stream Mode provides a streaming interface that transparently connects a WiConnect serial interface with a network stream such as a UDP, TCP or TLS client or server. Stream mode provides a simple 1-1 connection between a physical serial interface and a network stream.

Bytes or characters sent from the host to a serial interface are transparently pushed by WiConnect to a network stream via a wireless interface. Conversely, bytes or characters received by a network stream (from a remote server) via a wireless interface are transparently pushed by WiConnect to a serial interface connected to the host. A wireless serial port is a typical application that uses stream mode.

3.12 Want more?

The WiConnect Reference Guide, available online at http://wiconnect.ack.me, provides detailed information about all WiConnect features, commands and variables, versions and release notes.

A number of simple and more sophisticated example applications are also provided to help you get the most out of WiConnect and the AMW004 module.

©2014 ACKme Networks. http://ack.me

4 Ordering Information

Table 4 provides ordering information for AMW004 evaluation boards.

Table 5. Ordering Information

Part Number	Picture	Description
AMW004-A01 'Hornet'		Hornet module adapter. Includes AMW004 module.
AAE001		Bare bones evaluation board that takes an AMW004-A01 Hornet module adapter. Does **NOT** include a AMW004-A01 'Hornet' module adapter!
AMW004-E02 'Marlin'		WiConnect development and evaluation platform for the AMW004-A01 Hornet through-hole pluggable module adapter. This part number includes both the AAE001 evaluation board and the AMW004-A01 module.
AMW004-E03 'Mackerel'		WiConnect development and evaluation platform for the surface-mount AMW004 module. This board is similar to the AAE001 Marlin board but is instead fitted with a surface mount AMW004 module that is not removable.

©2014 ACKme Networks. http://ack.me

5 Revision History & Glossary

5.1 Revision History

Table 6: Document Revision History

Revision	Date	Change Description
ARG-MW004E-100R	May 18, 2014	First release
ARG-MW004E-101R	May 20, 2014	Added a section on USB Serial driver verification
ARG-MW004E-102R	August, 2014	Added AMW004-A01 'Hornet' mechanical dimensions Updates for WiConnect 1.2 release
ARG-MW004E-103R	October 22, 2014	Correct Mackerel H2 pin numbering error, update manual setup, update Configuring a Terminal with Windows driver procedure.
ARG-MW004-104R	November 21, 2014	Add System Indicator LEDs section

5.2 Glossary

In most cases, acronyms and abbreviations are defined on first use. A comprehensive list of acronyms and other terms used in ACKme Networks documents are provided on the ACKme Networks website at http://ack.me/FAQs/Glossary.

©2014 ACKme Networks. http://ack.me

APPENDIX A – Configuring a Terminal Application

The following instructions describe how to obtain and install a serial terminal application for use on computers running a Windows® or OS X operations system. ACKme recommends using PuTTY for Windows® systems and CoolTerm for OS X systems, however other equivalent applications may work equally well.

Plug the evaluation board into the computer using a USB cable before continuing.

Verify USB-Serial Driver Installation

The USB-Serial interface on WiConnect evaluation boards is based on an FTDI chip used widely in the industry. Most operating systems including Windows®, OS X, and Linux provide integrated FTDI driver support as part of the operating system. However some older machines, or machines that do not pickup regular updates, the driver may not automatically install and it is necessary to manually install the driver.

On computers running Windows®, check if the driver is installed as follows:

- Display the System Control Panel (e.g. press the 'Windows' key + Pause key).
- In the left-hand column near the top of the panel, click **Device Manager**
- In the Device Manager dialog, expand the Ports (COM and LPT) branch
- FTDI drivers appear under the USB Serial Port items. If no items of this kind appear, the drivers may not be installed.
  Note: The driver entry may not appear if the ACKme device is not connected to the USB port and powered on.
- Double click the USB Serial Port entry.
- Select the **General** tab in the USB Serial Port Properties dialog. Check the following:
  - Manufacturer: FTDI
  - Device status: This device is working properly
- Select the **Driver** tab in the USB Serial Port Properties dialog. Check the following:
  - Driver Provider: FTDI
  - Update drivers if necessary by clicking the **Update Driver…** button.
- In some cases, the FTDI driver may actually be correctly installed, but the driver may not enumerate as a Virtual Communications Port (VCP). If this is the case, find the device under the USB Serial Bus controllers section of the Device manager, open the device, check the VCP box, then click OK. It may be necessary to unplug/replug your evaluation board in order for the VCP driver to load correctly.

If the FTDI drivers do not appear to be installed, see the installation instructions on the FTDI official site:

http://www.ftdichip.com/Support/Documents/InstallGuides.htm

©2014 ACKme Networks. http://ack.me

Set Up Tera Term for Windows®

Tera Term is available as a free download from http://ttssh2.sourceforge.jp. Download and install Tera Term now if you have not already done so. The following procedure describes how to establish a UART serial connection between Tera Term and the evaluation board.

1. Start the Tera Term application and click on the **Setup** tab. A dropdown appears providing options to configure Tera Term as shown in the screen capture on the right. Select **Terminal**.

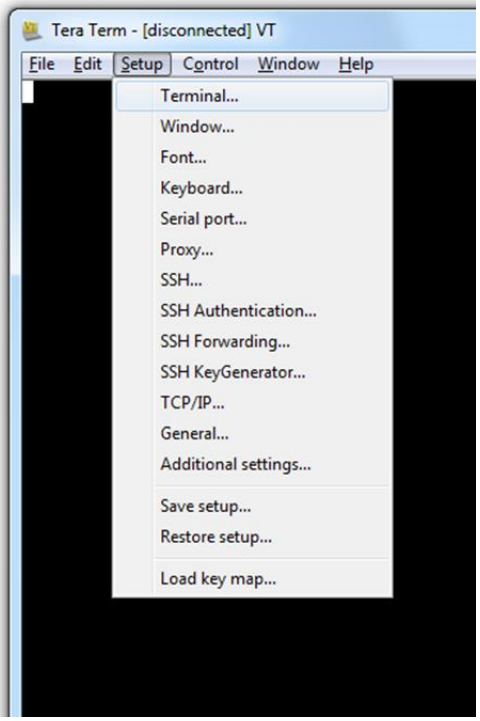

2. Terminal Setup. In the **New-line** section of the **Setup Terminal** dialog box (see the screen capture below), ensure that:
   - **Receive**: is set to **CR**
   - **Transmit:** is set to **CR+LF**

   Close the **Terminal Setup** dialog box by selecting **OK**.

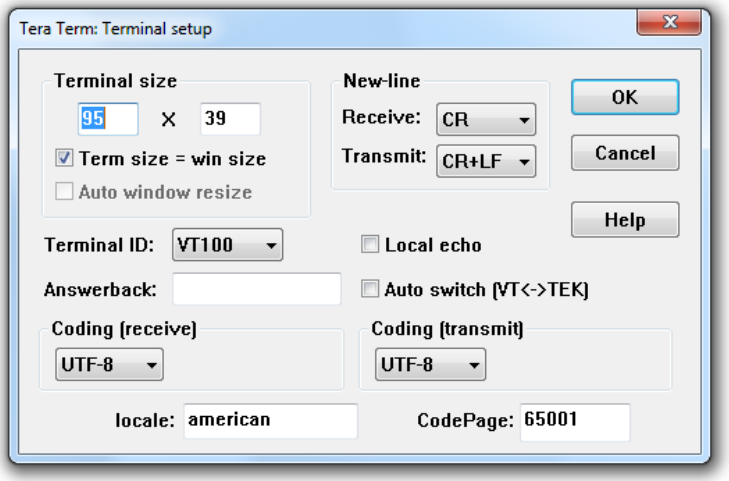

3. Serial Port Setup. Select the **Setup** tab again from the main window, then select **Serial port**. A **Setup serial port** dialog box appears. Ensure the settings in the dialog box match the settings shown in the following screen capture. The COM **Port** shown in the example (COM14) will almost certainly be different for your evaluation board, be sure to choose the COM port that matches your board.

©2014 ACKme Networks. http://ack.me

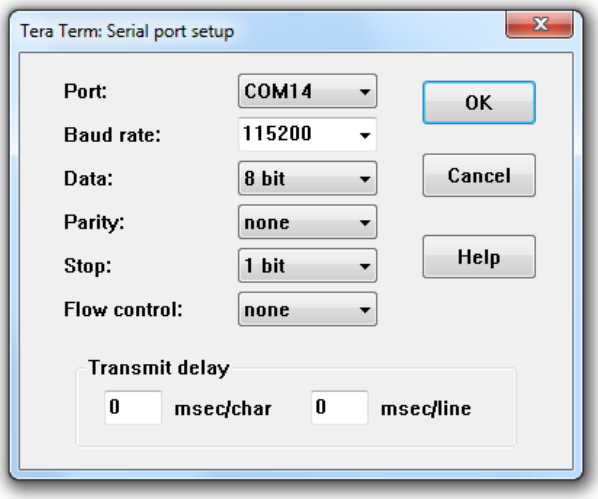

When the serial port has been correctly setup, close the **Serial port** setup dialog box by selecting **OK**.

4. New Connection. From the Tera Term application menu, setup a new connection with the evaluation board by selecting **File** | **New connection** (or by pressing **Alt** + **N**) as shown in the screen capture on the right. A New connection dialog box appears as shown in the following screen capture.

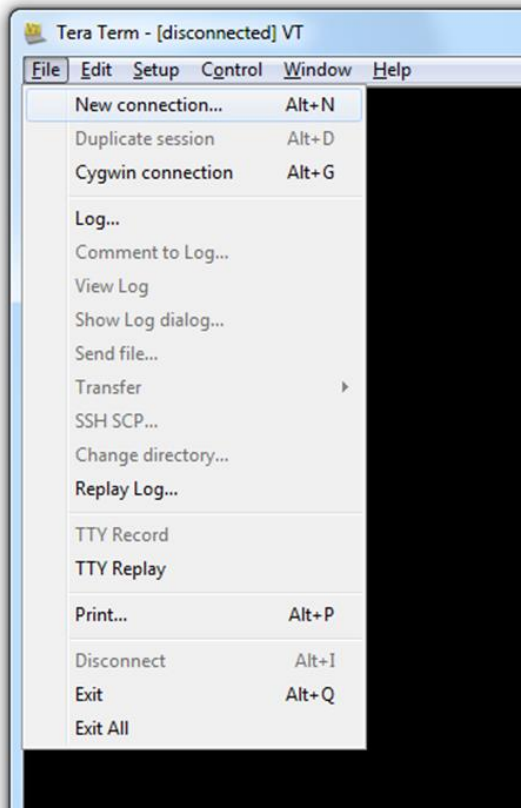

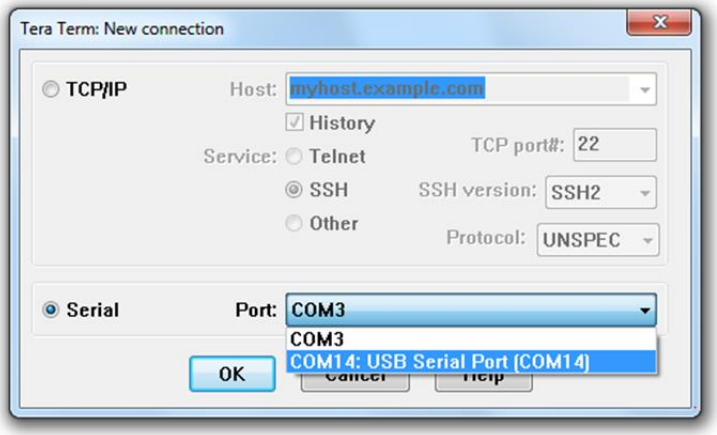

Check the **Serial** radio button, then click the **Port:** dropdown menu and select the COM port that matches your evaluation board. The COM port description for the evaluation board includes the text **COMxx: USB Serial Port (COMxx)**.

Once the correct COM port has been selected, close the **New connection** dialog box by selecting **OK**.

5. Testing the connection. If Tera Term was able to connect successfully, the text in the application title bar indicates which COM port is connected, and the baud rate of the connection. For the example documented above, Tera Term displays 'COM14:115200baud'. The Tera Term screen remains blank however until a character is sent to WiConnect. Try pressing the **Enter** key, WiConnect responds with `Ready` as shown in the following screen capture.

©2014 ACKme Networks. http://ack.me

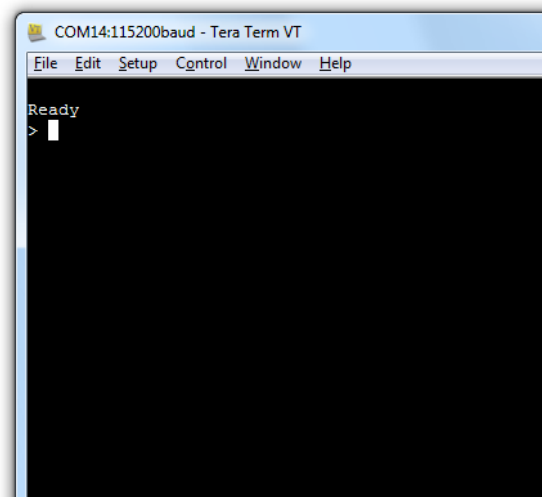

Set Up CoolTerm for OS X

CoolTerm is available as a free download from http://freeware.the-meiers.org/CoolTermMac.zip. Download and install CoolTerm now if you have not already done so.

The following procedure describes how to establish a UART serial interface between CoolTerm and the evaluation board.

1. Start the CoolTerm application and click the **Options** menu icon. The CoolTerm Configuration window opens. Set the Serial Port configuration options as follows:
   - Port: **usbserial-XXXXXXXX**
   - Baudrate: **115200**
   - Data bits: **8**
   - Parity: **none**
   - Stop bits: **1**
   - Flow control : Deselect all options
2. Click **OK**.
3. Click the **Connect** menu icon. The CoolTerm application connects to the evaluation board.

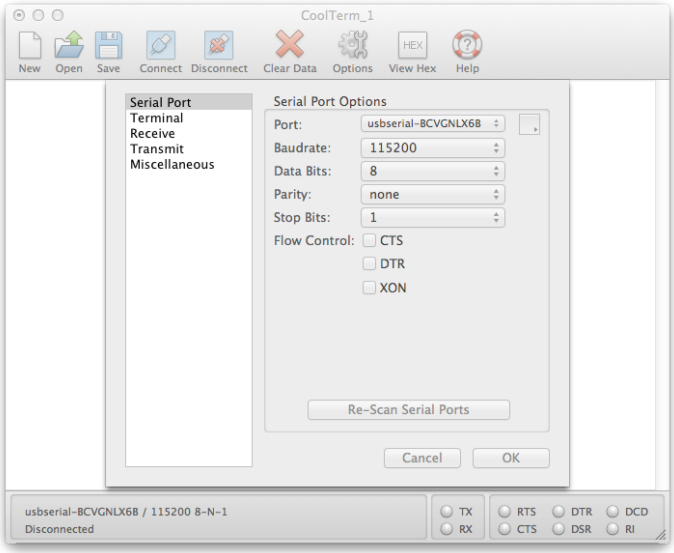

Try pressing the **Enter** key, if CoolTerm is successfully connected to the evaluation board, WiConnect responds with

```
Ready
>
```


©2014 ACKme Networks. http://ack.me

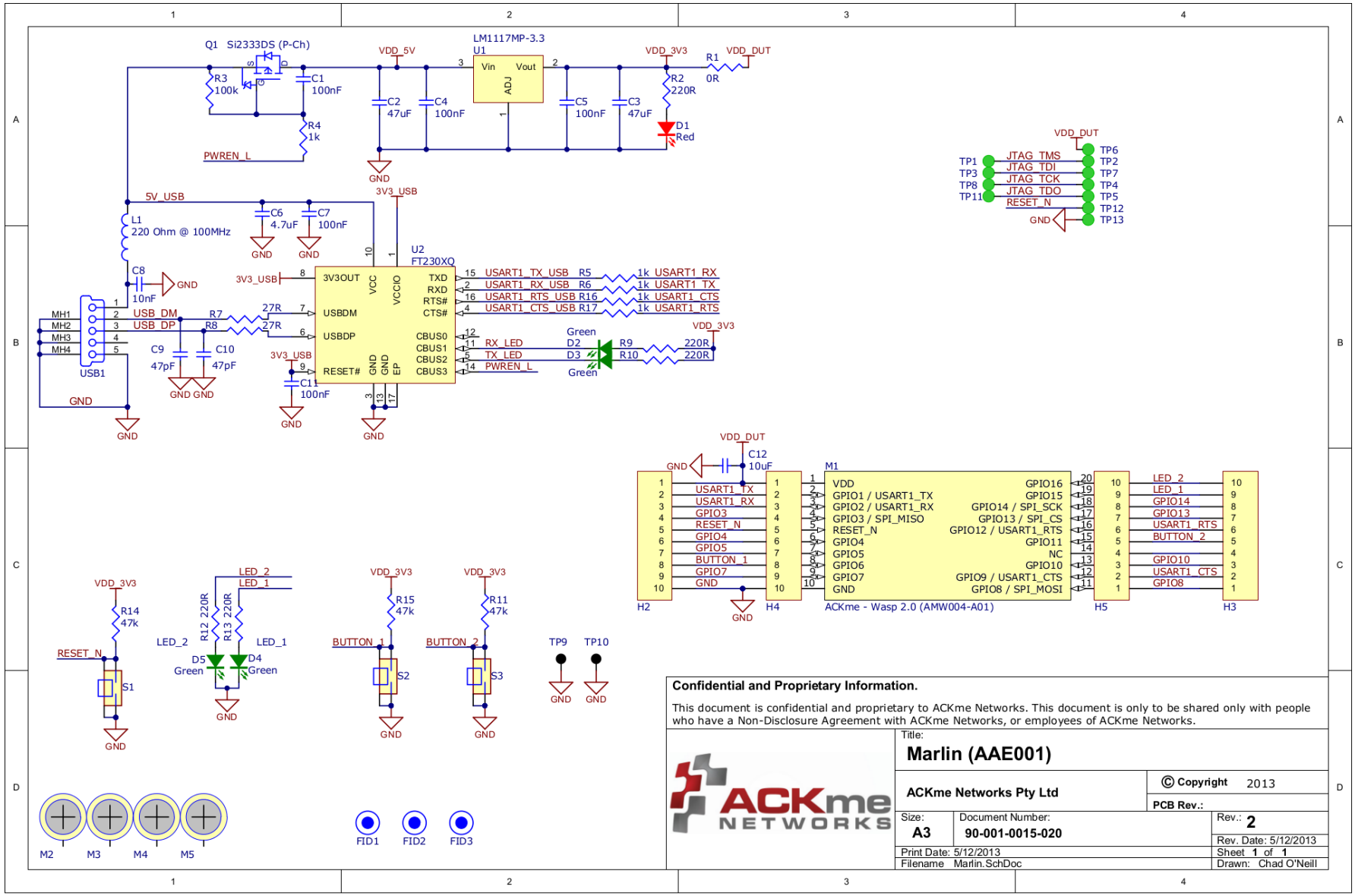
Q1 Si2333DS (P-Ch)
R3 100k
C1 100nF
R4 1k
PWREN_L
VDD_5V
C2 47uF
C4 100nF
LM1117MP-3.3
U1
Vin
Vout
ADJ
C5 100nF
C3 47uF
VDD_3V3
R2 220R
D1 Red
R1 0R
VDD_DUT
GND
5V_USB
L1 220 Ohm @ 100MHz
C6 4.7uF
C7 100nF
3V3_USB
C8 10nF
U2 FT230XQ
3V3OUT
VCC
VCCIO
USBDM
USBDP
RESET#
GND
EP
TXD
RXD
RTS#
CTS#
CBUS0
CBUS1
CBUS2
CBUS3
USART1_TX_USB R5
USART1_RX_USB R6
USART1_RTS_USB R16
USART1_CTS_USB R17
1k USART1_RX
1k USART1_TX
1k USART1_CTS
1k USART1_RTS
USB_DM
USB_DP
R7 27R
R8 27R
C9 47pF
C10 47pF
USB1
MH1
MH2
MH3
MH4
C11 100nF
RX_LED
TX_LED
PWREN_L
D2
D3
Green
R9 220R
R10 220R
VDD_DUT
TP1
TP3
TP8
TP11
JTAG_TMS
JTAG_TDI
JTAG_TCK
JTAG_TDO
RESET_N
TP6
TP2
TP7
TP4
TP5
TP12
TP13
C12 10uF
M1
VDD
GPIO1 / USART1_TX
GPIO2 / USART1_RX
GPIO3 / SPI_MISO
RESET_N
GPIO4
GPIO5
GPIO6
GPIO7
GND
GPIO16
GPIO15
GPIO14 / SPI_SCK
GPIO13 / SPI_CS
GPIO12 / USART1_RTS
GPIO11
NC
GPIO10
GPIO9 / USART1_CTS
GPIO8 / SPI_MOSI
ACKme - Wasp 2.0 (AMW004-A01)
H2
H4
H5
H3
USART1_TX
USART1_RX
GPIO3
RESET_N
GPIO4
GPIO5
BUTTON_1
GPIO7
LED_2
LED_1
GPIO14
GPIO13
USART1_RTS
BUTTON_2
GPIO10
USART1_CTS
GPIO8
R14 47k
S1
R12 220R
R13 220R
D5 Green
D4 Green
R15 47k
S2
R11 47k
S3
TP9
TP10
M2
M3
M4
M5
FID1
FID2
FID3
Confidential and Proprietary Information.
This document is confidential and proprietary to ACKme Networks. This document is only to be shared only with people who have a Non-Disclosure Agreement with ACKme Networks, or employees of ACKme Networks.
Title:
Marlin (AAE001)
ACKme Networks Pty Ltd
© Copyright 2013
PCB Rev.:
Size: A3
Document Number: 90-001-0015-020
Rev.: 2
Rev. Date: 5/12/2013
Print Date: 5/12/2013
Sheet 1 of 1
Filename Marlin.SchDoc
Drawn: Chad O'Neill

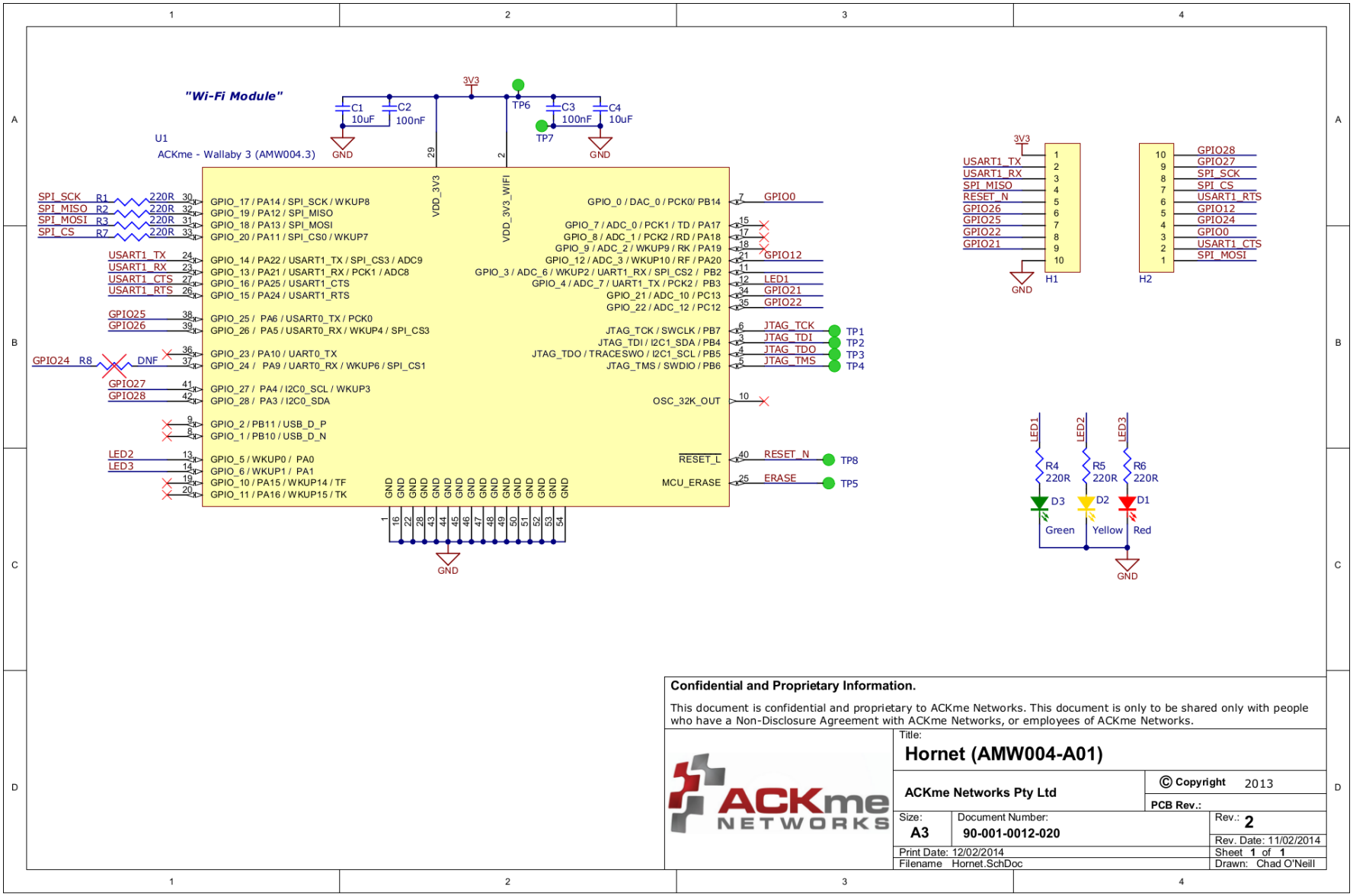
"Wi-Fi Module"
U1
ACKme - Wallaby 3 (AMW004.3)
3V3
C1 10uF
C2 100nF
TP6
TP7
C3 100nF
C4 10uF
GND
VDD_3V3
VDD_3V3_WIFI
SPI_SCK R1 220R
SPI_MISO R2 220R
SPI_MOSI R3 220R
SPI_CS R7 220R
USART1_TX
USART1_RX
USART1_CTS
USART1_RTS
GPIO25
GPIO26
GPIO24 R8 DNF
GPIO27
GPIO28
LED2
LED3
GPIO_17 / PA14 / SPI_SCK / WKUP8
GPIO_19 / PA12 / SPI_MISO
GPIO_18 / PA13 / SPI_MOSI
GPIO_20 / PA11 / SPI_CS0 / WKUP7
GPIO_14 / PA22 / USART1_TX / SPI_CS3 / ADC9
GPIO_13 / PA21 / USART1_RX / PCK1 / ADC8
GPIO_16 / PA25 / USART1_CTS
GPIO_15 / PA24 / USART1_RTS
GPIO_25 / PA6 / USART0_TX / PCK0
GPIO_26 / PA5 / USART0_RX / WKUP4 / SPI_CS3
GPIO_23 / PA10 / UART0_TX
GPIO_24 / PA9 / UART0_RX / WKUP6 / SPI_CS1
GPIO_27 / PA4 / I2C0_SCL / WKUP3
GPIO_28 / PA3 / I2C0_SDA
GPIO_2 / PB11 / USB_D_P
GPIO_1 / PB10 / USB_D_N
GPIO_5 / WKUP0 / PA0
GPIO_6 / WKUP1 / PA1
GPIO_10 / PA15 / WKUP14 / TF
GPIO_11 / PA16 / WKUP15 / TK
GPIO_0 / DAC_0 / PCK0/ PB14
GPIO_7 / ADC_0 / PCK1 / TD / PA17
GPIO_8 / ADC_1 / PCK2 / RD / PA18
GPIO_9 / ADC_2 / WKUP9 / RK / PA19
GPIO_12 / ADC_3 / WKUP10 / RF / PA20
GPIO_3 / ADC_6 / WKUP2 / UART1_RX / SPI_CS2 / PB2
GPIO_4 / ADC_7 / UART1_TX / PCK2 / PB3
GPIO_21 / ADC_10 / PC13
GPIO_22 / ADC_12 / PC12
JTAG_TCK / SWCLK / PB7
JTAG_TDI / I2C1_SDA / PB4
JTAG_TDO / TRACESWO / I2C1_SCL / PB5
JTAG_TMS / SWDIO / PB6
OSC_32K_OUT
RESET_L
MCU_ERASE
GPIO0
GPIO12
LED1
GPIO21
GPIO22
JTAG_TCK TP1
JTAG_TDI TP2
JTAG_TDO TP3
JTAG_TMS TP4
RESET_N TP8
ERASE TP5
H1
H2
GPIO28
GPIO27
SPI_SCK
SPI_CS
USART1_RTS
GPIO12
GPIO24
GPIO0
USART1_CTS
SPI_MOSI
SPI_MISO
RESET_N
GPIO26
GPIO25
GPIO22
GPIO21
LED1
LED2
LED3
R4 220R
R5 220R
R6 220R
D3 Green
D2 Yellow
D1 Red
Confidential and Proprietary Information.
This document is confidential and proprietary to ACKme Networks. This document is only to be shared only with people who have a Non-Disclosure Agreement with ACKme Networks, or employees of ACKme Networks.
Title:
Hornet (AMW004-A01)
ACKme Networks Pty Ltd
© Copyright 2013
PCB Rev.:
Size: A3
Document Number: 90-001-0012-020
Rev.: 2
Rev. Date: 11/02/2014
Print Date: 12/02/2014
Sheet 1 of 1
Filename Hornet.SchDoc
Drawn: Chad O'Neill

Appendix B – Evaluation Board Schematics & Mechanical Dimensions

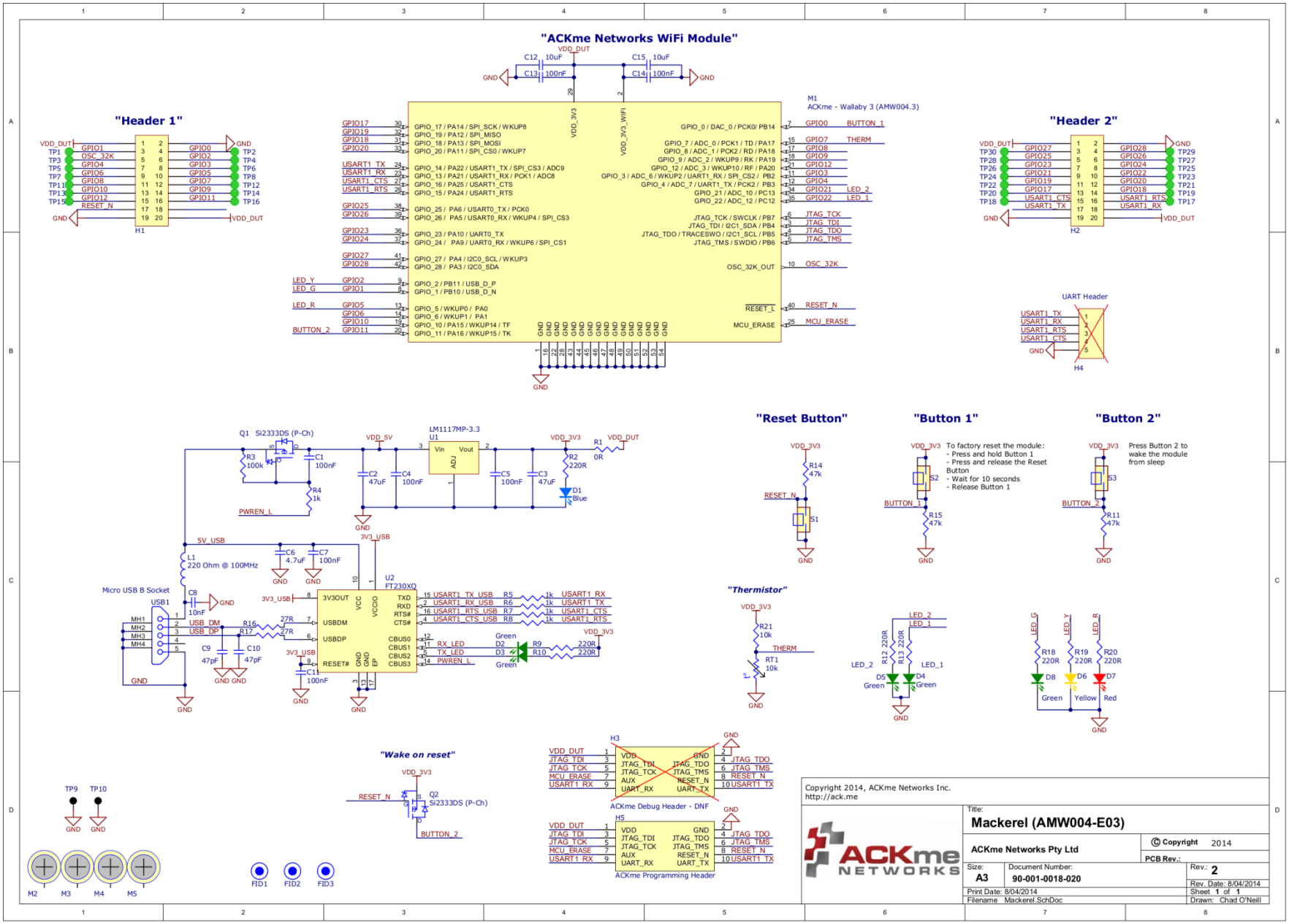

Mechanical Dimensions for AMW004-A01 'Hornet'

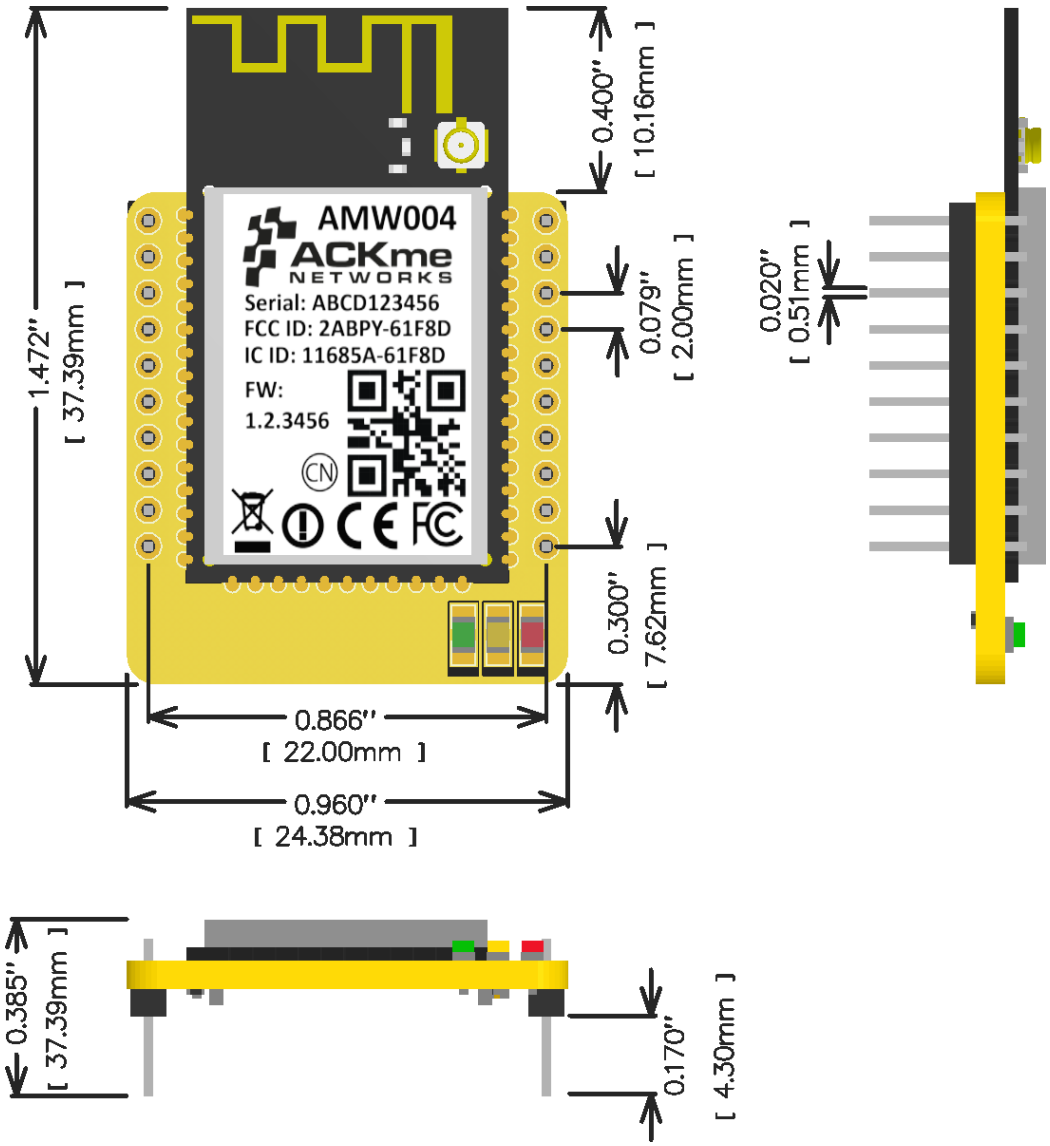

©2014 ACKme Networks. http://ack.me

ACKme reserves the right to make changes without further notice to any products or data herein to improve reliability, function, or design. Information furnished by ACKme is believed to be accurate and reliable. However, ACKme does not assume any liability arising out of the application or use of this information, nor the application or use of any product described herein, neither does it convey any license under its patent rights nor the rights of others.

ACKme Networks

US Headquarters
2 North Santa Cruz Ave
Suite #207
Los Gatos CA 95030

Contact Information
+1 (408) 402 5708
http://ack.me/contact

© 2014 ACKme Networks Inc. All rights reserved.

ARG-MW004E-105R • AMW004 Evaluation Guide
February 27, 2015